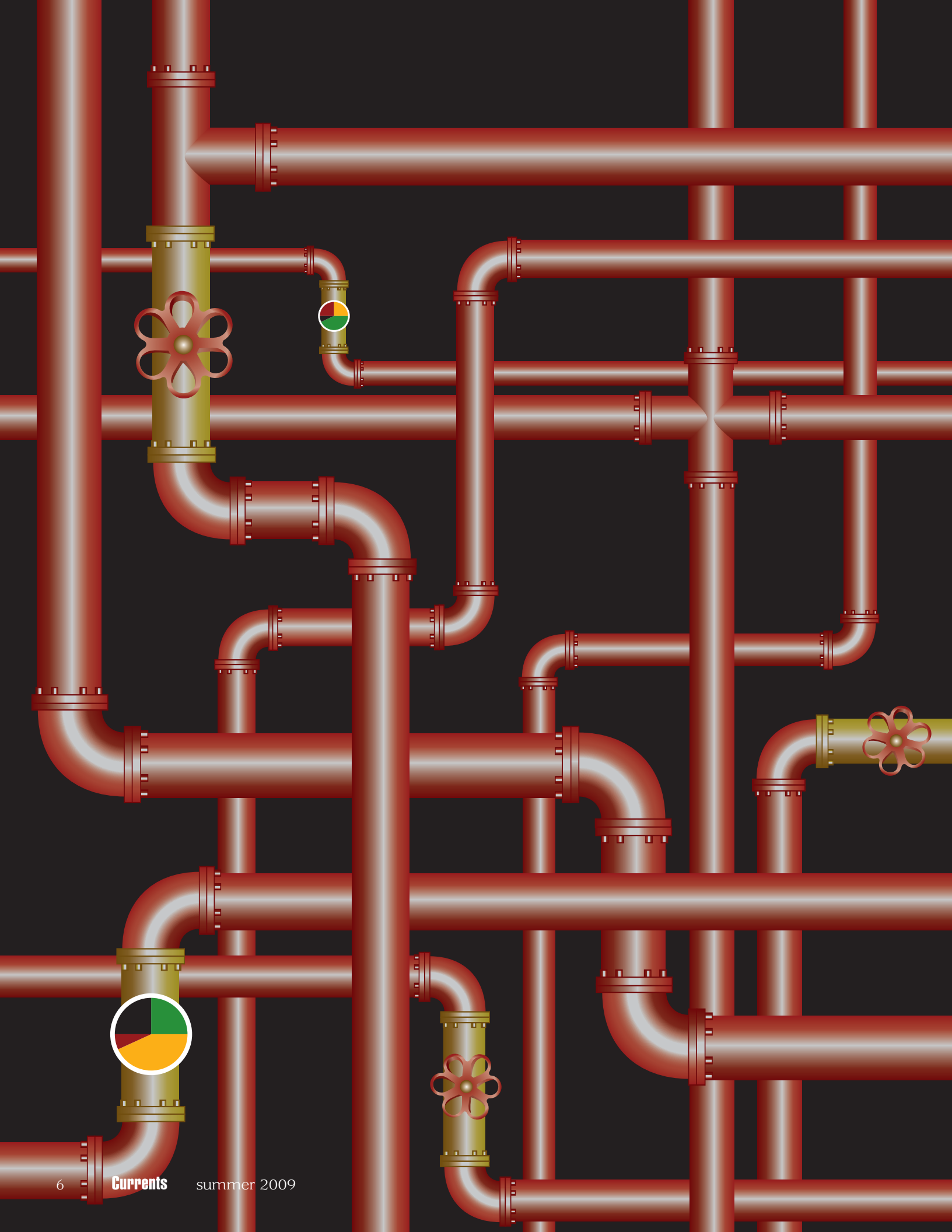

Carderock Develops Fully Automated Oil Pollution Abatement System

Shipboard System Easier to Operate & More Efficient

Managing shipboard-generated oily waste has always been a complex and difficult task. Oil pollution abatement (OPA) systems onboard U.S. Navy and other U.S. Department of Defense (DoD) vessels have traditionally consisted of loosely integrated subsystems that require a significant degree of training and manning to operate. To reduce the manning requirements and improve reliability and performance of these systems, the Navy has successfully completed the development and testing of a fully integrated, prototype automated oil pollution abatement (AOPA) system.

Shipboard Oil Pollution Abatement Systems: An Overview

The U.S. Navy relies on shipboard OPA systems to collect, transfer, hold, and process shipboard-generated oily waste so that water meeting acceptable oil concentration levels can be discharged overboard while separated bulk oil is retained for offloading to a shore facility. Shipboard OPA systems consist primarily of two independent subsystems: the oily waste transfer (OWT) system and the oil-water separator (OWS) system. An OWT system is comprised of a network of piping and manually operated valves, pumps and other components that are distributed throughout each ship's engineering spaces. This system is used to maintain bilge and tank levels as well to collect oily waste for subsequent processing by the OWS system, which separates the oil from the water.

Although ships are required to have OPA systems, many are struggling to maintain and operate their systems. In addition to reliability, maintainability and operability issues associated with these systems, most OWSs have only rudimentary, outdated control systems, while the manually operated OWT systems have practically no control system at all. The combination of these issues leads to excessive manning requirements to monitor, operate, maintain and train for this equipment. Conducting a routine oily waste transfer operation on a large vessel requires communication and coordination between personnel in different engineering spaces. Operators or Sailors have to manually align valves, manually prime pumps and start/secure the operation using a manual pump motor controller. While this operation is occurring, the operator must conduct visual observations of tank level indicators and/or to ascertain bilge levels via visual inspection.

OPA systems collect, transfer, hold and process shipboard-generated oily waste so that water meeting acceptable oil concentration levels can be discharged overboard while separated bulk oil is retained for offloading.

Traditional Oil Pollution Abatement Systems

Shipboard OPA systems generally consist of an oily waste transfer OWT system and one or two gravity-assist OWS systems that share a single oily waste holding tank (OWHT) and a single waste oil tank (WOT). In some cases, secondary oily waste treatment systems are installed downstream from the OWS system. An oil content monitor is also installed downstream from the OWS to continuously sample the OWS effluent and provide decision-making on whether to discharge an acceptable effluent overboard (low oil concentration) or recirculate the effluent back to the OWHT (high oil concentration). Separated oil that accumulates in the OWS is automatically purged to the WOT by the OWS system.

Traditional Oily Waste Transfer Systems

Shipboard OWT systems primarily consist of bilges, sumps and tanks linked via a network of piping with manually operated pumps and valves. The OWT system allows shipboard personnel to transfer accumulated oily waste between points both on and off the vessel. The OWT system is used to manually transfer oily waste that has accumulated in bilges or tanks to the OWHT where it is subsequently

The shipboard VS-50 OWS system.
Stephen Hopko

processed by an OWS system. Under certain conditions, some OWT pumps may require manual priming by the operator before start-up to avoid damage from running either dry, or in a relatively dry state.

Oily Waste Holding Tank

The OWHT is part of the OWT system that is shared by the OWS system and serves the following purposes:

- A collection point for oily waste for subsequent processing by the OWS system

  Most oily waste is transferred to the OWHT via the OWT system; however, as the result of gravity, some relatively small volumes of oily waste may also drain into this tank.

- A first stage separation unit and settling tank

  Bulk oil and very large oil droplets rise to the top of the tank at varying degrees of rise rate, depending upon tank agitation, residence time, sea state and the presence of emulsifiers. The tank's suction and discharge lines are usually located away from one another to avoid recently discharged oily waste, particulate matter and sludge from fouling the OWS tank and internal oleophilic plate packs which help enhance separation of the oil from the processed water.

- A temporary holding tank if the character of the oily waste is such that the OWS cannot discharge it overboard at the time (e.g., large concentrations of small oil droplets)

  If the oil content monitor determines that the oil concentration in the OWS effluent is above the established overboard discharge level (15 parts per million oil-in-water), the monitor will activate a diverter valve to recirculate the oily waste back to the OWHT to be reprocessed.

Most OWS systems are designed to process the bulk oil phase in the OWHT and purge the oil to the WOT. This is not desirable, however, since it unnecessarily contaminates the OWS unit. In addition, this method of processing the bulk oil is a much slower and less precise process, and it diverts the OWS from its prime function of removing smaller concentrations (and smaller oil droplets) from the effluent, reducing it to a quality which can be discharged overboard.

Waste Oil Tank

The WOT is also part of the OWT system that is shared by the OWS system. It serves the following purposes:

- To automatically receive oil that has been separated from the water phase by the OWS,

- To receive bulk oil that is manually stripped from the OWHT using the OWT system, and
- To receive large quantities of bulk oil directly from a bilge (e.g., oil spills) or intermediary oily waste collection tank.

Existing System Configuration

Existing OWS and OWT systems are designed and configured without much regard to how each system impacts the other. The OWS/OWT system combination does not support bi-directional communication between systems that would enhance each other's operation and effectiveness. The only link currently between the two systems is that they share the same OWHT and that the OWS, if placed in automatic mode, will start or stop based on liquid levels in the OWHT.

The operator may not even be aware of existing component failures and problems until a catastrophic condition or event occurs.

Many aspects of shipboard OWT systems negatively impact or hinder OWS system performance, operation and its ability to remove processed water in an effective and timely manner. For example, the mechanical action of existing manually operated OWT pumps may break down the oil's viscosity. If this happens, smaller oil droplets form and it becomes more difficult for gravity-assist OWS systems to achieve an acceptable overboard discharge level. In this case, an OWT pump operating at a lower speed may reduce the mechanical shear, thus allowing the OWS system to produce a lower oil concentration, and possibly an acceptable overboard discharge.

The OWS may also have difficulty achieving an overboard discharge due to the effluent oil concentration being slightly above the overboard discharge limit. In this instance, sufficiently clean water from a bilge or intermediary oily waste collection tank may be used to help dilute the contents of the OWHT to acceptable levels since this oily waste water has to be sent to the OWHT anyway.

TOP: NSWCCD engineers testing automation of AOWT system pumps.

RIGHT: NSWCCD engineers preparing to inject representative bilge water mixture into the VS-50 OWS system.

Stephen Hopko

Normal Oily Waste Transfer System Operation for Existing Systems

Although other transfer combinations are possible, the following are indicative of the most likely OWT operations that occur shipboard (in no particular order of importance or frequency):

- Transfer of bilge contents to an intermediary tank.
- Transfer of intermediary oily waste collection tank contents to the OWHT.
- Transfer of bilge contents directly to the OWHT.
- Transfer of oil spills to the WOT.
- Transfer of bilge, OWHT and/or WOT contents to a pierside connection for offloading.
- Strip bulk oil phase from the OWHT and discharge to the WOT.
- Strip water phase from the WOT and discharge to the OWHT (under special circumstances).

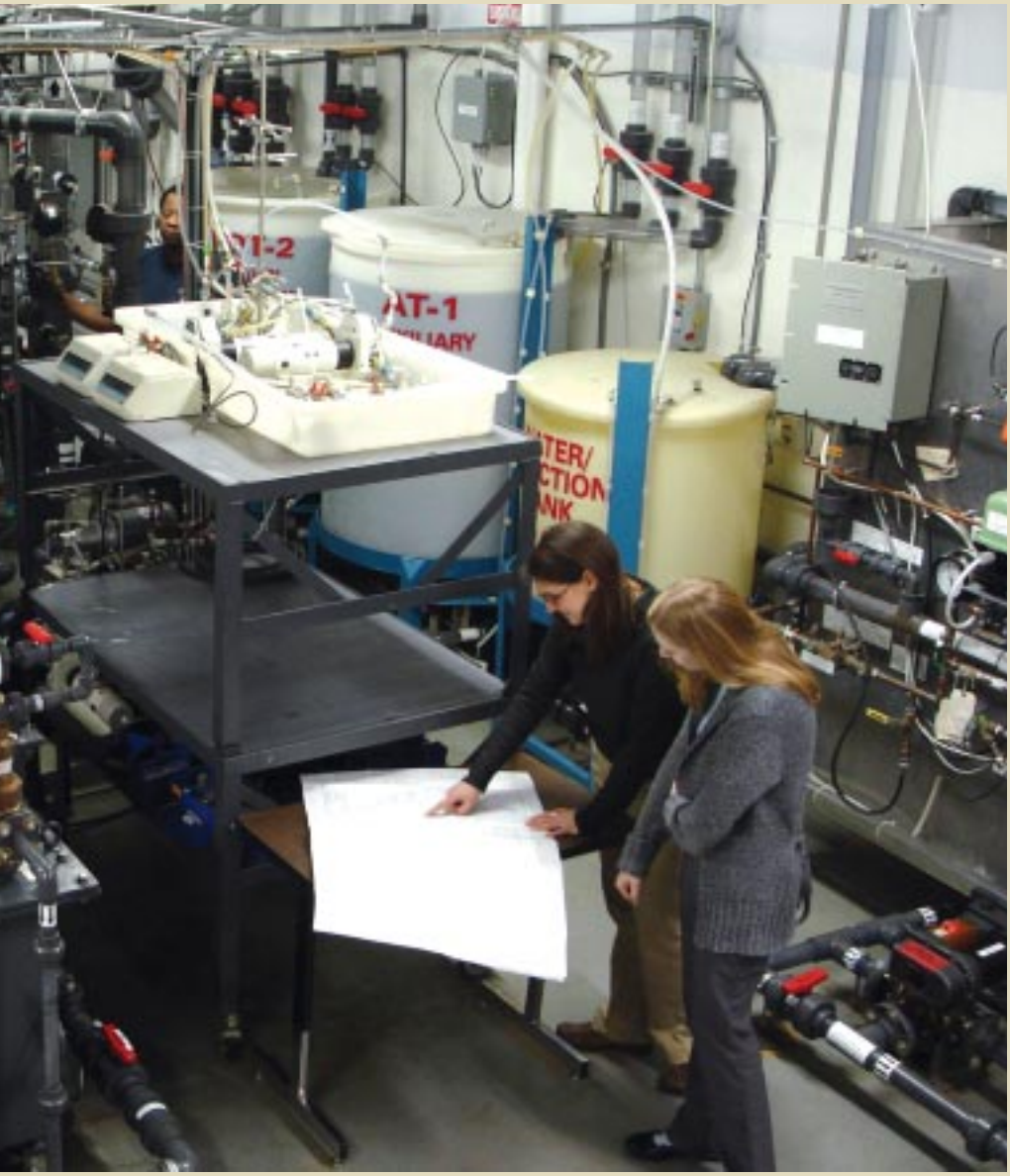

Typical Oily Waste Transfer Procedure

In traditional systems, an operator or watch stander in an engineering space may recognize (by visual inspection) that oily waste has accumulated in a bilge to a level that necessitates that the contents be transferred to an intermediary tank, or directly to the OWHT for processing by the OWS system. After permission is granted, the proper valve alignment achieved, and the pump manually primed, if necessary, the oily waste that collected in the bilge or intermediary oily waste tank is then manually transferred to an OWHT via the OWT system. Most shipboard OWT systems consist of one or more manually operated pumps with an associated network of piping, manually operated valves, and other devices (e.g., relief valves, pressure gauges, inlet strainers, etc.). If the vessel is pierside, the operator may also have the option of offloading the bilge contents directly to a shore side tank truck or oily waste processing facility. Once the volume of oily waste is allowed to accumulate to a particular level in the OWHT, it is subsequently processed by the OWS system.

Disadvantages & Limitations of Existing Oil Pollution Abatement Systems

Existing shipboard OPA systems, which include OWT and OWS systems, have experienced numerous reliability, maintainability, operability and corrosion-related

problems. In addition, particular combinations of OPA system-related components and subsystems have generated integration issues that preclude the efficient operation of this equipment. Poor shipboard oily wastewater management, maintenance, operating and troubleshooting procedures and guidelines have also contributed to operational and maintenance-related problems. In many cases, there is a lack of understanding of the system, including the state of the equipment and proper interpretation of instrumentation readings including tank and bilge level conditions. These and other factors have contributed to unacceptable OWS performance with respect to high oil content in the effluent and premature failure of many OPA system components. This results in frequent and repeated maintenance efforts for the equipment, much of which could be avoided. In many instances, the operator may not even be aware of existing component failures and problems (e.g., diminished pumping capacity) for extended periods of time or until a catastrophic condition or event occurs (e.g., OWT pump failure).

A recent OPA system grooming effort onboard USS IWO JIMA (LHD-7), led by engineers from Naval Surface Warfare Center, Carderock Division (NSWCCD) identified over 80 repairs and maintenance items necessary to bring the system into operational condition. This effort took about a year and totaled over $225,000 in labor and materials expenses. This was necessary to help preserve the aquatic environment and to avoid the high in-port offloading costs that are incurred whenever OWS systems are inoperative. The ship reported that the cost of oily waste removal can range between $15,000 and $20,000 per port visit, with daily offloading costs ranging from $5,000 to $10,000 when the OWS system is down. A similar grooming effort was recently accomplished for USS BATAAN (LHD-5) at a cost ranging between $200,000 and $225,000.

A recent OPA system grooming effort onboard the USS IWO JIMA identified over 80 repairs and maintenance items necessary to bring the system into operational condition.

Mass Communication Specialist 2nd Class Michael Starkey

The existing methods used to manually align valves and execute OWT pump priming/operation procedures are subjective, sometimes confusing and prone to misalignment and/or improper pump operation. Existing OWT operations unnecessarily expose operators to safety hazards such as lifting heavy and/or slippery deck plates to access valves, using tools while in an awkward position to operate a stubborn valve, standing on potentially slippery piping or equipment to access overhead valves, oily waste vapors originating from large liquid surface areas in the bilge, and inadvertently lifting a high capacity relief valve due to valve misalignment.

Operator turnover, limited diagnostic indicators and subjective decisions used to align and operate existing OWT valves and pumps have contributed to premature equipment damage without the operator's awareness.

As previously mentioned, OWS and OWT systems do not typically

communicate with one another and act as two independent systems. This situation promotes unnecessary operation of equipment due to the recirculation of already processed oily wastewater that could not be discharged overboard, which leads to an unnecessary increase in maintenance. In addition, oily wastewater that could have been safely discharged overboard is retained onboard, which contributes significantly to the vessel's weight. A full OWHT onboard a large ship may hold more than 58 tons of water. Also, additional disposal costs are incurred whenever a ship has to offload oily wastewater pierside due to the inability to process and discharge it overboard. The inability to discharge wastewater when underway also impacts operation, since the ship must return to port to offload its oily wastewater as bilges and tanks fill. The end result is that maintenance efforts and associated costs remain at unacceptably high levels when processed oily wastewater cannot be discharged overboard.

Many attempts by individual OPA equipment manufacturers to resolve issues with their particular pieces of equipment or components fall short of minimum expectations. The lack of standardization has also contributed to numerous system integration issues over the years with a variety of equipment installed. In addition, different subsystems and subcomponents cannot be installed without considering their mutual impact and consequences.

Due in part to the design shortcomings of commercial off-the-shelf (COTS) equipment, it became readily apparent that the approach needed was to have NSWCCD engineers design, develop and test alternate solutions utilizing the extensive knowledge and expertise of its In-Service Engineering Agents (ISEA). NSWCCD engineers have extensive shipboard, laboratory and testing experience related to oily waste systems and participate in day-to-day shipboard operations of these systems. This expertise in combination with their state-of-the-art test facilities, placed NSWCCD in a strong position in that its engineers understand the shipboard operating environment and its associated equipment and operating personnel needs. NSWCCD also recognized the need to modernize the outdated, somewhat hazardous, and labor-intensive procedures that must be routinely coordinated and/or communicated between various personnel at multiple shipboard locations.

The Basics About the AOWT System

The AOWT system provides the following relief for existing OWT systems:

1. Reduces maintenance and associated costs.
2. Improves reliability.
3. Avoids inadvertent equipment damage.
4. Significantly reduces weight by minimizing the volume of oily waste retained in bilges and tanks.
5. Significantly reduces oily waste offloading costs.
6. Reduces manning and operator interaction/intervention.
7. Reduces chance for operator error.
8. Minimizes impact upon ship operations.
9. Provides automated troubleshooting to pinpoint problem area.
10. Improves and sustains occupational health and safety by minimizing exposure to oily waste streams in machinery spaces and bilge areas.
11. Improves safety to the environment.
12. Improves human habitat/quality of life.

Oil Water Separator Development

NSWCCD engineers first addressed the existing issues associated with large capacity OWSs by researching, developing, testing and evaluating (RDT&E) a 50 gallon-per-minute OWS system. The VS-50 OWS is a programmable logic controller (PLC)-driven, multi-staged system that automatically manages and processes shipboard-generated oily wastewater. Through the use of unique process features, customized display screens and PLC programming, the system addresses many of the shortcomings of typical problematic shipboard OWS systems while simplifying its overall use and operation via subsystem integration and automation. The system elimi-

nates some of the subjective operator decisions by providing automation, and communicates bilge management decisions in advance that would otherwise negatively impact OWS reliability and performance. Land-based testing of the VS-50 OWS system was successfully conducted at the NSWCCD Environmental Quality Systems Land-based Test Facility in Philadelphia, PA during 2002 and 2003. Shipboard testing of the system was successfully conducted onboard the USS WASP (LHD-1) between 2003 and 2004 during in-port and underway periods. Follow-up shipboard visits in 2008 and 2009 showed that the VS-50 OWS was able to process over 10,410,000 gallons (39,406 cubic meters) of oily waste with 4,498 hours of operation in a five-year period. The system was also in superb material condition with no major reported problems other than routine maintenance and minor repairs during the five year period.

AOWT System Development

Although the maintainability, reliability, operability, system integration and, to some degree, performance of the existing large capacity OWS systems was improved as demonstrated during development efforts, these efforts did not address the problematic OWT systems, which are used to transfer and collect oily waste for subsequent processing by the OWS system.

NSWCCD followed up on the VS-50 OWS system approach and philosophy by conducting RDT&E of a prototype automated oil waste transfer (AOWT) system. This is a fully automated, PLC-based "smart system" with graphical display touch screens that will facilitate shipboard oily waste monitoring and management. It addresses known shortcomings, limitations, problems and safety issues for existing manually operated shipboard OWT systems. The AOWT system automatically monitors, manages, prioritizes,

NSWCCD engineers successfully conducted shipboard testing of the VS-50 OWS system onboard the USS WASP between 2003 and 2004 during in-port and underway periods.

Mass Communication Specialist 2nd Class Zachary L. Borden

executes and controls simultaneous OWT operations for shipboard-generated oily waste.

The AOWT was designed to be survivable under all anticipated operating conditions and scenarios. It is extremely flexible in its functionality and provides comprehensive diagnostic and troubleshooting features and support while making the PLC program sophistication transparent to the end user. The AOWT system standardizes oily waste management in a predictable manner and eliminates much of the subjective decision-making currently made by shipboard personnel, thus freeing up personnel for other tasks.

The land-based AOWT system incorporates key configurational aspects from different shipboard scenarios to demonstrate the system's ability to automatically manage complex and simultaneous OWT operations under simulated shipboard conditions. The AOWT system communicates directly with the VS-50 OWS system, coordinating OPA operations, thus improving the effectiveness and efficiency of both systems. Both systems integrated together make up the AOPA system.

The Benefits of the AOWT System

The AOWT system was developed to provide a fully automated "smart system" that addresses aspects of existing OPA systems that negatively impact the operation, reliability and maintainability of both the OWS and manually operated OWT systems. The system's benefits include:

- The system design helps minimize the operators' exposure to the somewhat hazardous conditions found in engineering compartments and bilge areas throughout the ship.
- This system is designed to provide for interoperability between all subsystems and components of the OPA system. This includes bi-directional communication between the OWS and OWT systems, which enhances the efficiency of both systems.
- A host of automated features enhances safety to equipment and the environment.
- The system provides operator awareness, diagnostic help and immediate alternative OWT options should problems arise while the vessel is either in-port or underway.
- Many of the system's features have commercial applications for OWT-related systems, and for other processes, both shipboard and land-based.
- Various suites of features and options can easily be implemented, removed or disabled to accommodate a particular budget and/or shipboard configuration of any size, with a minimum of programming adjustments.
- The custom-programmed, PLC-based control system with intuitive graphical display touch screens provides a comprehensive and robust control system.
- The system is designed to eliminate the subjective decision-making processes by shipboard personnel by providing fully automatic oily waste management capabilities.

The ultimate function of the AOWT system, in addition to improving personnel safety, is to efficiently process oily wastewater and remove the processed water from the vessel in an environmentally safe manner. This goal effectively minimizes bilge and tank levels while providing a significant and beneficial weight savings, thus reducing fuel consumption.

The AOWT system is capable of conducting efficient "smart" transfer operations while making its sophistication transparent to the end user.

How It Works

The AOWT control system hardware utilizes PLC technology and human machine interface (HMI) panels with advanced touch screen graphics and animation to clearly display flow paths and system operating data, including tank oil/water interface levels, tank and bilge total levels, automated valve positions, pump flow rates, operating pressures, differential pressures and pump casing total liquid levels. The AOWT control system can be operated by simple keystrokes. The HMI screen layout, screen negotiation, color selection, function keys, pull-down menus and popup windows are designed to be intuitive. The operator has the option of scrolling through different graphic or numerical display screens.

The system utilizes a zone approach to conduct OWT operations. Information is available for all control panels or zones, and is also localized so each zone can operate independently, if needed. Each zone consists of several hardware components that make up the integrated machinery control system. Each shipboard installation consists of one main control panel

(MCP), one main input/output (I/O) enclosure, and local control panels (LCP) and I/O enclosures for each OWT pump or group of pumps. A zone will consist of one main engineering space or one auxiliary equipment space. One OWT pump is provided per each space that requires a pump. However, there will be some instances where two OWT pumps are located nearby one another in the same zone.

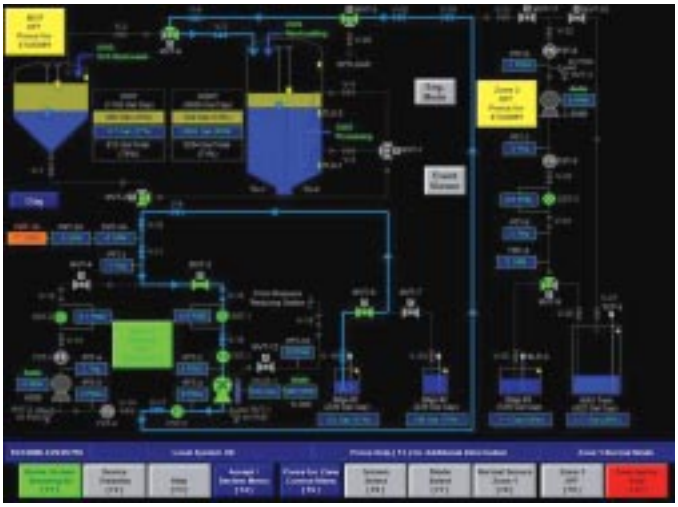

To accommodate peak demand periods, the AOWT control system logic is capable of automatically coordinating and conducting simultaneous transfer operations that do not share common paths or negatively impact each another. For example, an OWT pump may be conducting transfer operations from its local bilge by forwarding the bilge water to a local oily waste collection tank while an OWT pump in another space may be conducting its own local bilge transfer to the OWHT. In this instance, the simultaneous operations do not overlap.

The AOWT eliminates much of the subjective decision-making currently made by shipboard personnel.

The AOWT control system is designed to be survivable to the extent that major enclosures are individually powered. If one portion of the AOWT control system is down, the remaining portions of the system will have less of a chance of being negatively impacted. Communication links between the various AOWT control system enclosures avoid multiple power sources from other AOWT system enclosures (e.g., incorporates the use of fiber optic connections and other low voltage communication signals). The operator can conduct repairs on one enclosure without electrically tagging out another that would cause more than one zone to be inoperative due to another zone's electrical tag-out. A zone approach also allows the programming to be generic and it can be modified to reflect various shipboard configurations of varying size and complexity.

Summary

The AOPA system is a "smart" system that for the first time, utilizes modern control system technology, innovative PLC programming,

TOP: Sample operating screen for the Navy prototype AOWT system.
Stephen Hopko

RIGHT: NSWCCD engineers testing AOPA system using simulators to mimic a variety of shipboard conditions.
Tim Kurylo

and complete system integration to provide effective and efficient means to automatically monitor, manage, prioritize, execute and coordinate simultaneous shipboard oily waste transfer and processing operations. The AOPA system consolidates subsystem control, standardizes oily waste management in a predictable manner, and eliminates subjective decision-making made by operators, while freeing up personnel for other tasks. The integration of modern control system technology can provide more effective and efficient means to automatically manage shipboard generated oily waste.

Current Situation

The way forward regarding OPA system reliability, maintainability and automation is to follow the philosophy used in developing the AOPA system. In fact, NSWCCD patent counsel authorized the preparation of patent applications for both the VS-50 and AOWT systems. Since the AOPA system is Navy-designed with no commercial manufacturer or vendor, a Cooperative Research and Development Agreement (CRADA) was established with Naval Automation Group (NAG) as NSWCCD's CRADA partner. A CRADA provides government agencies with the authority to enter into collaborative agreements with technology transfer partners. The goal is to provide the resources required to package the modular AOPA system as needed for the U.S. Navy. To keep costs low in today's fiscal environment, NSWCCD's teaming with NAG is a mutually beneficial arrangement. NAG will use its Navy and commercial expertise to apply the successfully implemented principles developed, tested, and fielded by the Navy and integrate these with the most promising commercial systems. This is expected to provide an affordable product that has the benefits and advantages associated with commercial products, while also incorporating the features and materials that, as NSWCCD has identified and proven, will provide a reliable and Sailor-friendly system. The end result will be a relatively low-cost system that reduces oily waste offloading costs, reduces manning and training requirements associated with maintenance and operation and ultimately preserves a clean aquatic environment. ⚓

CONTACT

Stephen Hopko
Naval Surface Warfare Center
Carderock Division
215-897-1539
DSN: 443-1539
stephen.hopko@navy.mil